

HYTEK POWER CO.,LTD.

COMPANY PROFILE
HTK REV-1.0 2603

HYTEK

en.hytek.cn

Contents

1 About HYTEK

2 R&D Innovation

3 Products

4 Applications



01 About HYTEK

Since 2002

Over twenty years of deep cultivation
in the field of hydraulic Solutions



2002
Founded in Wenzhou
Frist vane pump

2004
Frist valve



2005
ISO9001 certificate

2007
Shanghai R&D & Manufacturing Center



2008
First piston pump and motor



2012
First internal gear pump



2017
Established Hytek Power Co., Ltd.

2018
ISO14001
ISO45001
certificate

2019
National High-tech Enterprise
SAP Go-live



2020
No. 1 in china internal gear pump market for injection molding machines

2021
Intelligent manufacturing workshop in Tengqiao



2023
SE/PLM Go-live



NATIONAL

High-tech Enterprise
Specialized and Sophisticated Enterprise

600+
Employees

80+ million USD
Annual Sales

3
Manufacture Base

50,000㎡+
Factory Area

2,000+
Cooperative Client

20+
Business covers the country



VISION

Becoming the preferred partner for target customers with first-class quality performance

CORE IDEA

Perfection Sincerity Dedication Resolve

ENTERPRISE SPIRIT

Unity Dedication Professionalism Innovation

Manufacturing Center

EFFICIENT & RELIABLE







WenZhou Tengqiao-Shanghai

Customized FMS Flexible Production Line
Intelligent Automatic Assembly Line
5G+Smart Factory Lnternet Platform









Professional and dedicated quality inspection management team.
Based on the production concept of "pursuing excellence and craftsman spirit".
Continuous improvement of automated production capacity.

Business Layout





管理体系认证证书

MANAGEMENT SYSTEM CERTIFICATE

Environmental Management System Certificate

Certificate No: 3022S0[illegible]

Hereby Certify:

HYTEK POWER CO., LTD.

Unified Social Credit Code: 91330[illegible]

Registered address:No 156, Yuele West Street, Jiguangyuan, Lucheng District, Wenzhou City, Zhejiang Province, 325029
Office address:No 156, Yuele West Street, Jiguangyuan, Lucheng District, Wenzhou City, Zhejiang Province, 325029
Production address:No 156, Yuele West Street, Jiguangyuan, Lucheng District, Wenzhou City, Zhejiang Province:No 99, Shengyuan Road, Tengqiao Town, Lucheng District, Wenzhou City, Zhejiang Province 325029

EMS conforms to:

GB/T 24001-2016/ISO 14001:2015

Scope of Certificate:

the environmental management activities involved by Manufacture of plunger pump, plunger motor and gear pump (except those requiring qualification permission) and sites

Date of Issue:Jul 26, 2023;
Date of Expiry:Jul 25, 2026

This certificate in the state regulations administrative licence, Qualification, Mandatory product certification received within the validity period and the normal annual review of the case effectively.
To verify that this certificate is current please refer to CNCA website at http://www.cnca.gov.cn

Beijing Zhonghui Hengtai Certification Co., Ltd.



管理体系认证证书

MANAGEMENT SYSTEM CERTIFICATE

Occupational health and safety Management System Certificate

Certificate No: 3022S0[illegible]

Hereby Certify:

HYTEK POWER CO., LTD.

Unified Social Credit Code: 91330[illegible]

Registered address:No 156, Yuele West Street, Jiguangyuan, Lucheng District, Wenzhou City, Zhejiang Province, 325029
Office address:No 156, Yuele West Street, Jiguangyuan, Lucheng District, Wenzhou City, Zhejiang Province, 325029
Production address:No 156, Yuele West Street, Jiguangyuan, Lucheng District, Wenzhou City, Zhejiang Province:No 99, Shengyuan Road, Tengqiao Town, Lucheng District, Wenzhou City, Zhejiang Province 325029

OHSMS conforms to:

GB/T45001-2020/ISO 45001:2018

Scope of Certificate:

the occupational health and safety management activities involved by Manufacture of plunger pump, plunger motor and gear pump (except those requiring qualification permission) and sites

Date of Issue:Jul 26, 2023;
Date of Expiry:Jul 25, 2026

This certificate in the state regulations administrative licence, Qualification, Mandatory product certification received within the validity period and the normal annual review of the case effectively.
To verify that this certificate is current please refer to CNCA website at http://www.cnca.gov.cn

Beijing Zhonghui Hengtai Certification Co., Ltd.



NGV

Quality Management System Certificate

HYTEK POWER CO.,LTD.

Registered/Production/Business/Office Address: 156 Yuele West Street, Jiguang Garden, Lucheng District, Wenzhou city, Zhejiang Province, China

Quality Management System complies with

GB/T 19001-2016/ISO 9001:2015 **Requirements**

The certificate is valid for the following scope:

Hydraulic pump, hydraulic motor, hydraulic valve (21MPA-41mpa) design, manufacturing, sales and after-sales service

Certificate No.: 0522[illegible]
Certificate Date: 26-10-2021
Certificate Valid Date: 26-10-2021-25-10-2024
Date of initial Certification: 31-11-2018
Unified Social Credit Code of the Certified Organization: 91330[illegible]

The validity of this certificate is subject to the scan result of the QR code
This certificate information can be found on the official website of the Certification and Accreditation Administration of the People's Republic of China(www.cnca.gov.cn)

IAF CNAS

General Manager:



CMS

CERTIFITCATE OF CONFORMITY FOR MEASUREMENT MANAGEMENT SYSTEMS

CERTIFICATE No. CMS [B]2024AAA4503 [illegible]

Applicant: HYTEK POWER CO., LTD.

Address: No 156, Yuele West Street, Jiguangyuan, Lucheng District,Wenzhou City, Zhejiang Province

This is to certify that your measurement management systems of product quality, operation management, energy conservation and environmental monitoring conform to the requirements of the GB/T 19022-2003/ISO 10012:2003 Requirements for Measurement Processes and Measuring Equipment.

(The validity of this certificate is subject to the periodic supervision of the issuing authority. This certificate is valid only if it is combined with the Notification of Qualified Annual Supervision, after one period of supervision.)

Date of Issue: April 19,2024 Signature:

Valid Until: April 18,2029 Issuing Authority: China Certification Centre for Metrology and Measurement

AAA

China Certification Centre for Metrology and Measurement

No.3 Yahuanwu, Chaoyang District, Beijing, China 100029
Website: www.china-cms.org



02 R&D Innovation

Technology Center

Provincial
Enterprise Technology Center
Industrial Design Center

Continuously increasing R&D investment

20+million USD
research and development during the past three years

13%+
The proportion of R&D personnel

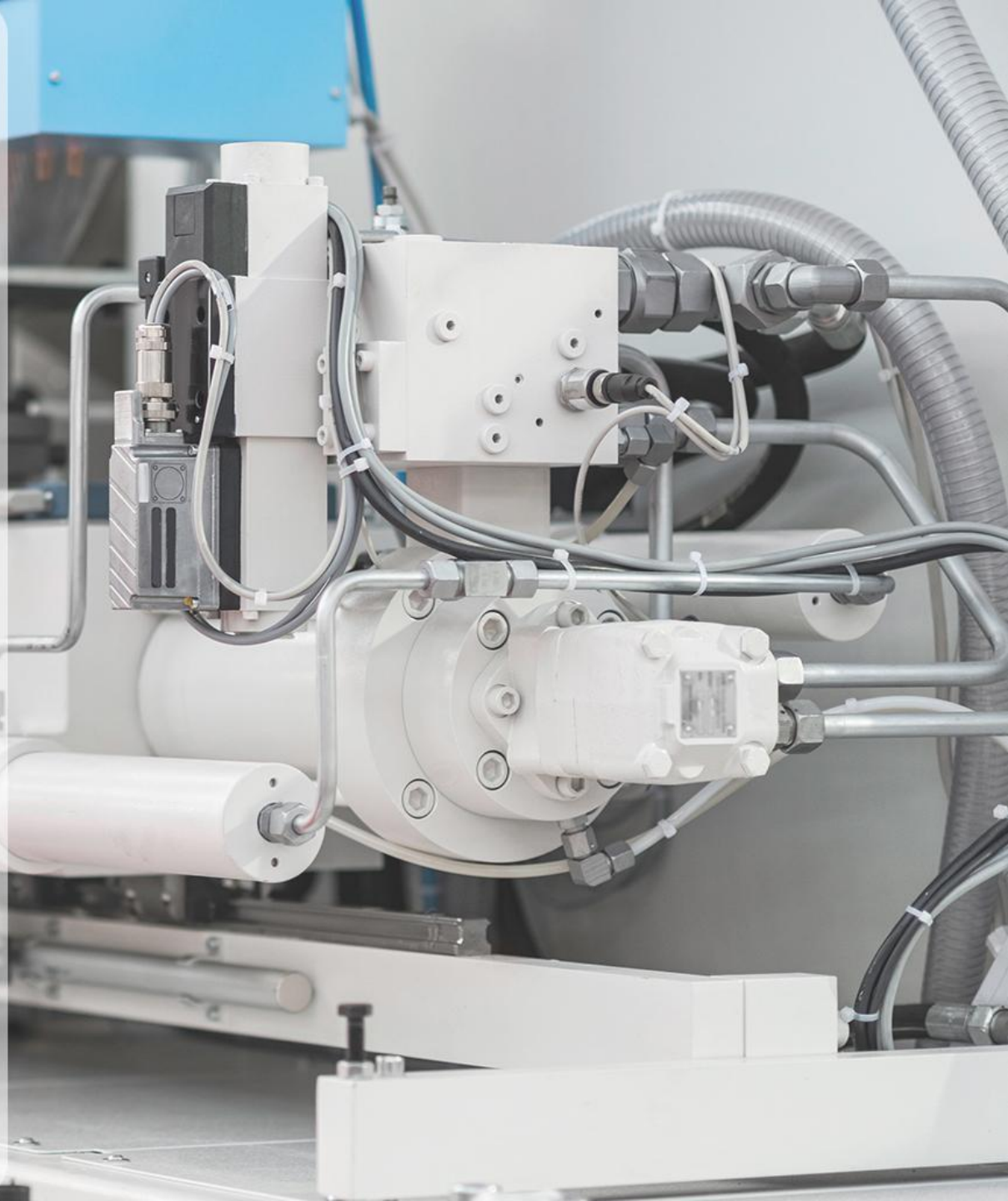

R&D Centers

Enhanced capacity for developing new products

Located in Wenzhou and Shanghai
Patents and Copyrights:110+
Tools: CAD, Solidedge, PLM (team center)





OKUMA



Nakamura-Tome



Performance Test



DMG MORI



ZEISS CONTURA



MITUTOYO

100+

testing procedures

40+

types of testing equipment

RIGOROUS

Advanced management software

HYTEK

By introducing the world's advanced management software, 5G technology and intelligent equipment, it promotes Hytek's digital transformation and intelligent upgrade, opens up the core business data chain, realizes visual data management , and optimizes product research and development, manufacturing, warehouse logistics, business management and other businesses activities. It will create a data-driven, agile and efficient operation and management system.



QC

HYTEK

SOP



SIP



Tooling



CMM data



Self-check records



PPK

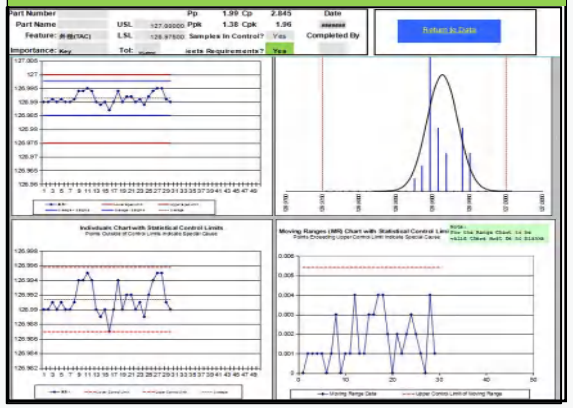

03 Products

Closed Circuit Pump

- Swashplate design variable axial piston pump
- Smooth change of flow direction
- Overload protection
- Stepless regulation
- Various kinds of control
- Integrated boost pump

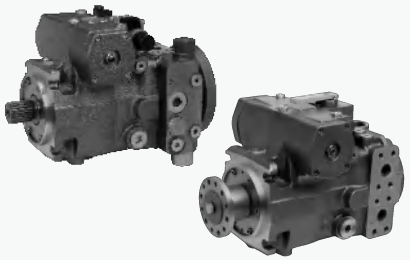

HA4VTG

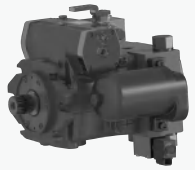

HP6VC

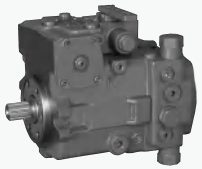

HP4VC



HP2VC

Open Circuit Pump

- Swashplate design/tilting axis
- The flow is proportional to the displacemen
- Extreme low noise level
- Long service life
- Various kinds of control

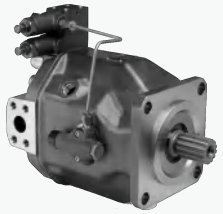

HA10VSO



HP3VO



HMVP

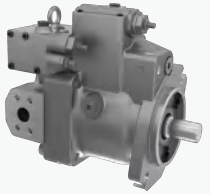

HK3VL



HP1VO

Fixed Displacement Motor

- Swashplate design/tilting axis
- High power/weight ratio
- Compact structure
- Output torque varies with differential pressure and displacement
- High overall efficiency



HA2FM



HAA2FM



HA2FE

HA2FM HAA2FM HA2FE

Variable Displacement Motor

- Swashplate design/tilting axis
- Stepless regulation
- The output speed changes with the flow and displacement
- Output torque varies with differential pressure and displacement
- Various kinds of control



HA6VM



HA6VE



HM3V



HM4V

Internal Gear Pump

- Low flow pressure pulse
- Stable flow pressure output
- High volumetric efficiency
- Extreme low noise level
- Long service life

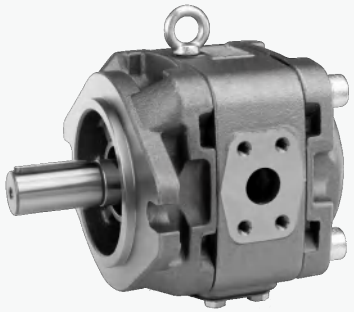

HG
single pump



HG
double-pump



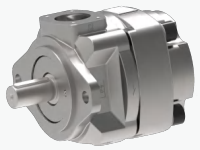



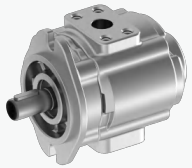



Diaphragm Pump



AG-10



AG-10
with electrical machinery



Hight Pressure Coolant System

Vane Pump

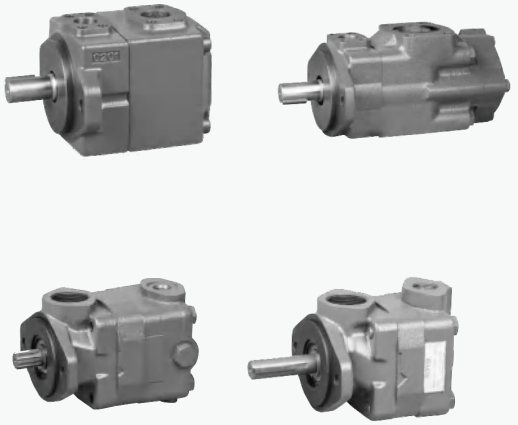

Hydrostatic Transmission Unit

For agriculture machinery,Integrated unit of pump and motor,Meet the application requirements of high pressure and high speed under harsh working conditions.

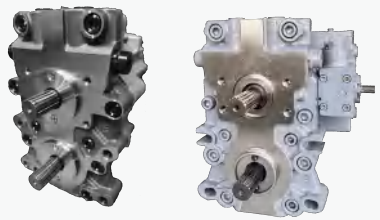

HT



HMT



HJS

For track drive of mini mobile machinery

Proportional Valve Group

- Proportional control valve
- Tandem structure
- Priority flow distribution function
- Flow Sharing System/Load Sensing System
- Hydraulic pilot control
- Optional flow regeneration function
- Low leakage holding valve structure avaliable

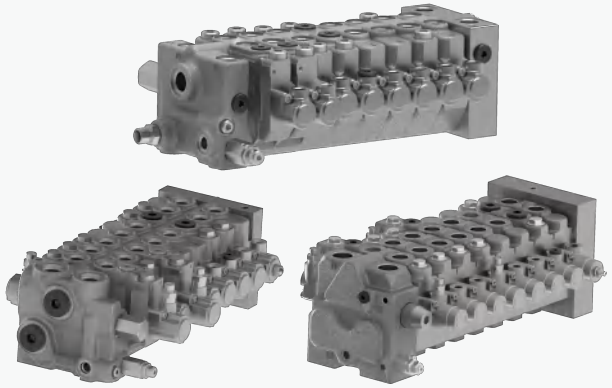

FS-09/12/18

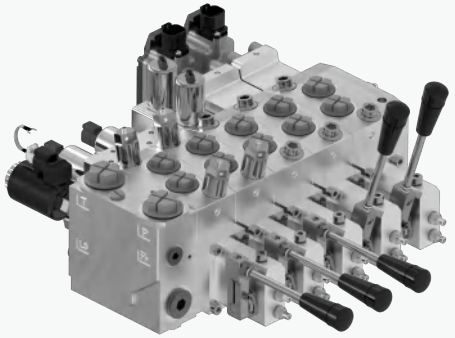

PC-12

HYTEK

Industrial Hydraulic Valve

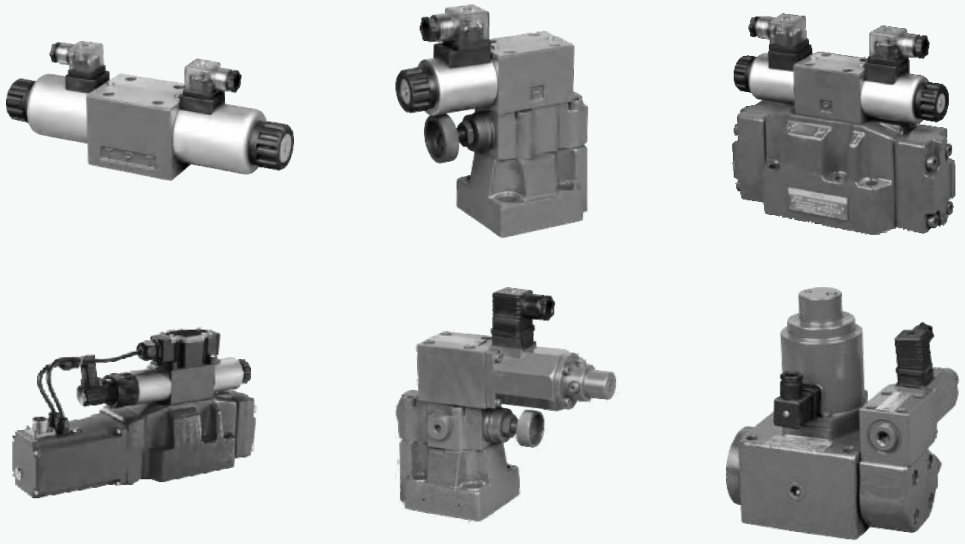

04 Applications

Applications

HYTEK



Construction Machinery

- Excavator
- Loader
- Concrete Mixer



Road Machinery

- Road Roller
- Paver



Material Handling Machinery

- Crane
- Boom Lift
- Forklift



Agricultural Machinery

- Harvester
- Transplanter
- Tractor
- Cotton Harvesting



Industrial Machinery

- Injection Machine
- Die Casting Machine
- Sheet Metal Machinery
- Shoe Machine

CONSTRUCTION MACHINERY

The construction machinery market has its own particularities and complexities, which consequently impose higher requirements on the transmission performance of machines.

With decades of deep involvement in the construction machinery sector, Hytek has improved some of the weak points in the application of pumps and motors within construction machinery, better meeting the demands of actual working conditions.



Excavator

Higher efficiency, lower fuel consumption, more comfortable operation

Load-independent compound actions
Optimal power matching for improving engine efficiency
Enhanced safety with load hold and pressure cut-off
Flow regeneration for higher efficiency
Simulated flow channel design for reduction in pressure loss
Customizable intelligent and control upgrades

Crawler Excavator

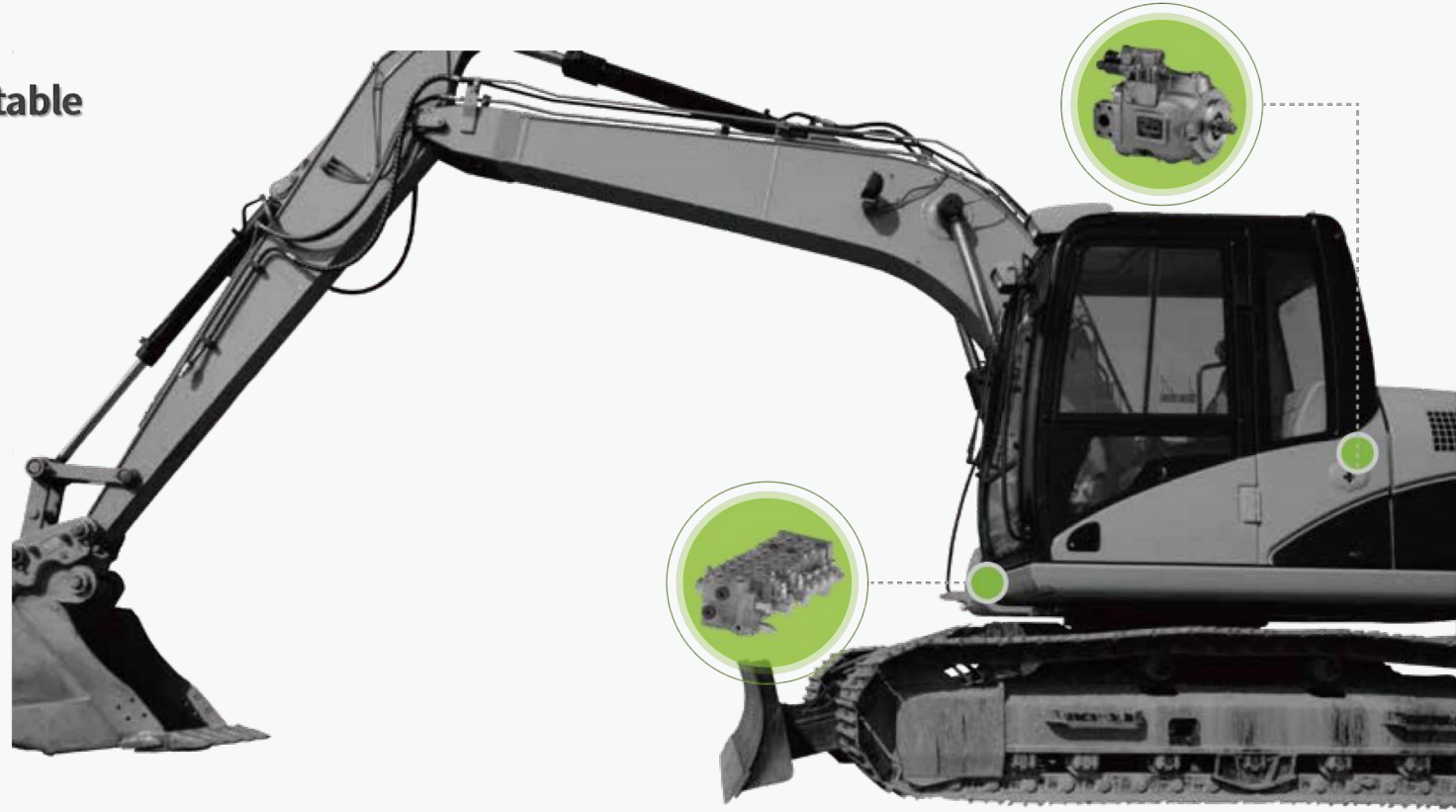



Mini Excavator

Excavator

Higher efficiency, lower fuel consumption, more comfortable operation

High-pressure open circuit pump, variable displacement motor integrated balance valve, proportional valve group, excellent acceleration performance, stronger power output, smoother travel, absorption of partial impact and vibration, and adaptive speed regulation according to load.



Wheel Excavator

Wheel Loader

The optimization of loading process improves the loading efficiency and accuracy

Load Sensing Sytem, energy saving and efficiency improvement
Precise motions, Efficient operation
Compact structure, Convenient installation
High speed and high-pressure internal gear pump, apply to new energy drive





Concrete Mixer

Electronic proportional/mechanical servo control system

Compact structure, Convenient installation
No throttling loss, Higher efficiency, More powerful
Closed loop control, High control precision
Low speed stability, Excellent startup performance
Constant speed travel



Hytek provides high-precision, high-performance, and cost-effective hydraulic closed-circuit products and solutions for road machinery of various tonnages and types.
The system structure is simple, energy-saving, significantly improving the travel and working performance of road machinery, ensuring excellent performance.

Over 1 million cycles of 450 bar repeated start stop impact verification

ROAD MACHINERY

Single drum roller solution

High amplitude and high frequency greatly improve

Suitable for 12-33 tons single drum rollers, with pressure levels up to 45Mpa, the travel pump has adjustable response characteristics to meet the flexible start-stop requirements of the roller;The vibration motor has good starting characteristics to ensure a timely response to the vibration mechanism. The design of double-tapered roller bearings can better adapt to vibration conditions,greatly improved compaction efficiency and quality.





Double drum roller solution

The adjustable variable displacement axial piston pump can meet the harsh working conditions and the flexible start-stop requirements of rollers

Suitable for 10-13 tons double drum rollers, with pressure levels reaching up to 45Mpa. The motor is designed with double-tapered roller bearings and can work at speed of up to 6000rpm, accommodating high frequency vibration conditions. Its good starting efficiency ensures stable starts and stops for rollers.

Tyre roller solution

Simple and flexible operation, strong slope climbing ability and high weight utilization

Suitable for 26-30 tons pneumatic rollers, with high pressure levels,The motor can integrate temperature and speed sensors to monitor the working conditions in real time.

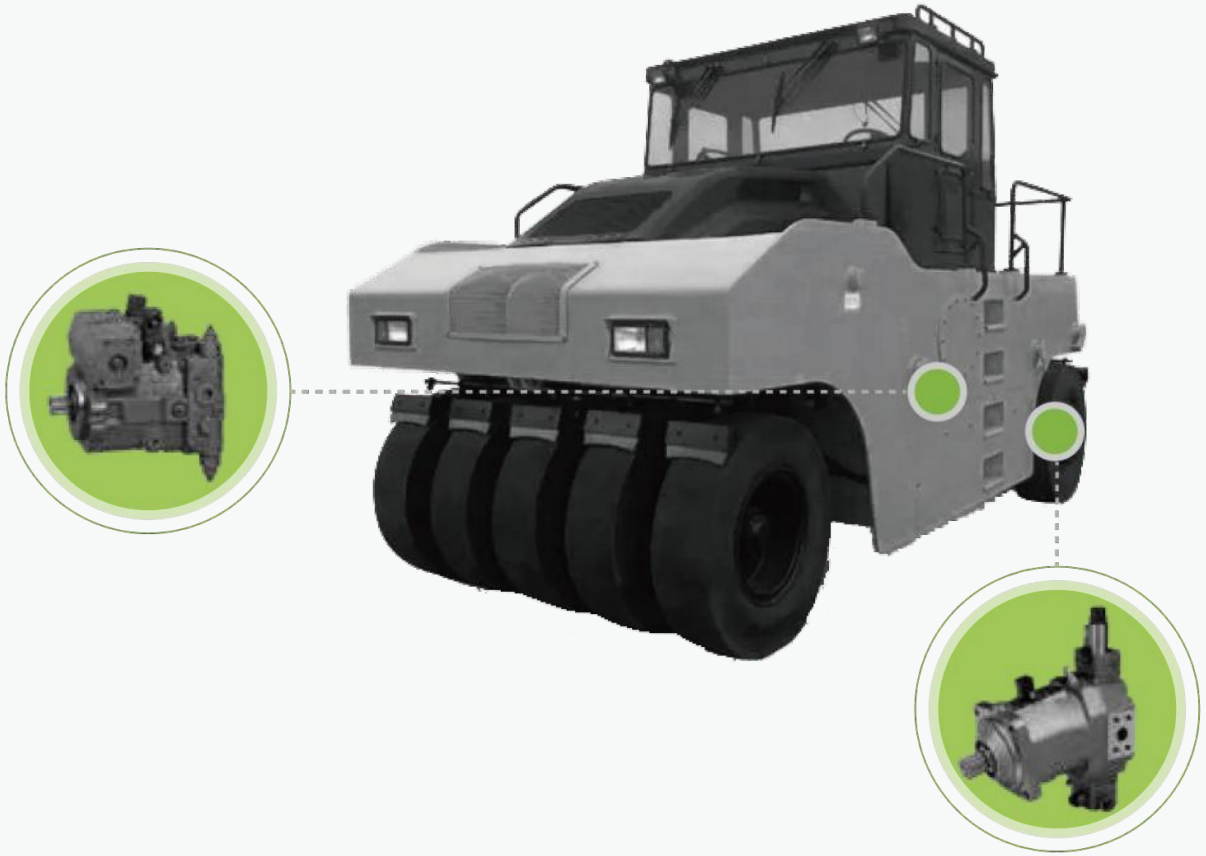



Mini roller solution

More powerful driving performance and higher compaction efficiency

Suitable for 3-5 tons mini road rollers, can integrate functions such as zero position
switch, safety valve, flushing valve, etc.

Paver

More accurate, more efficient, more reliable

High-pressure structural design is reliable and durable, can meet operational requirements
Flexible control of propel and steering, accurate operation
Accurate tamping/vibration control, enhancing work efficiency

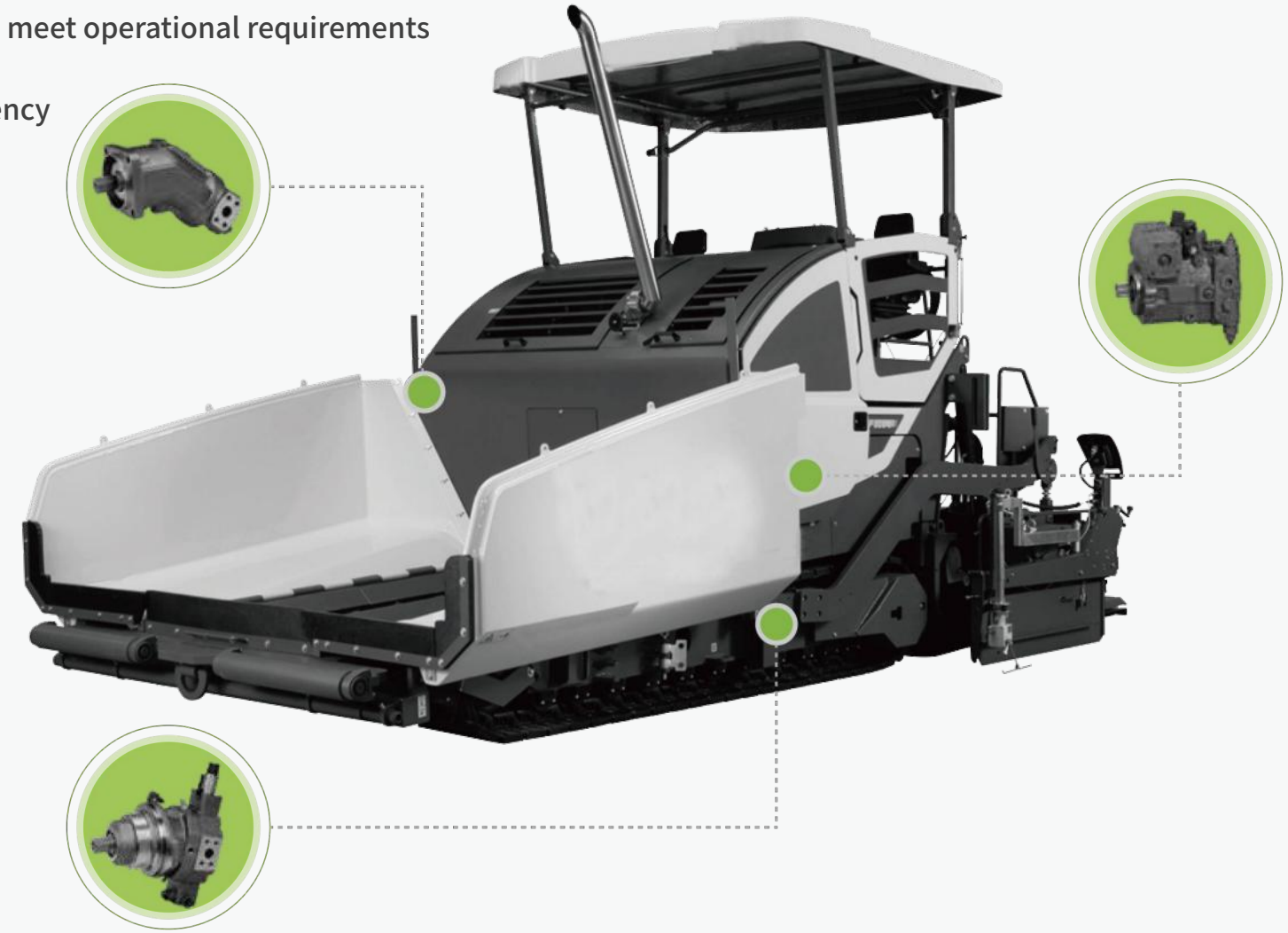

MATERIAL HANDLING MACHINERY

Hytek provides a variety of system configuration solutions for material handling machinery.
Meet the requirements of system compactness and optimized pipe layout,Higher volumetric efficiency meets the requirements of micro-operation,which makes the operation more stable and more efficient.



Crane Solutions

Single pump-load sensing system

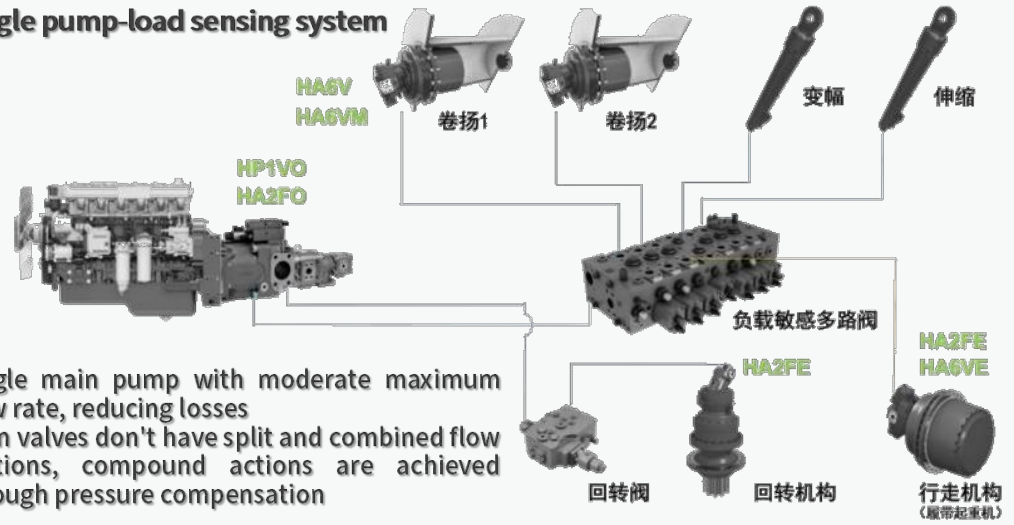

Single main pump with moderate maximum flow rate, reducing losses
Main valves don't have split and combined flow sections, compound actions are achieved through pressure compensation

Closed circuit system

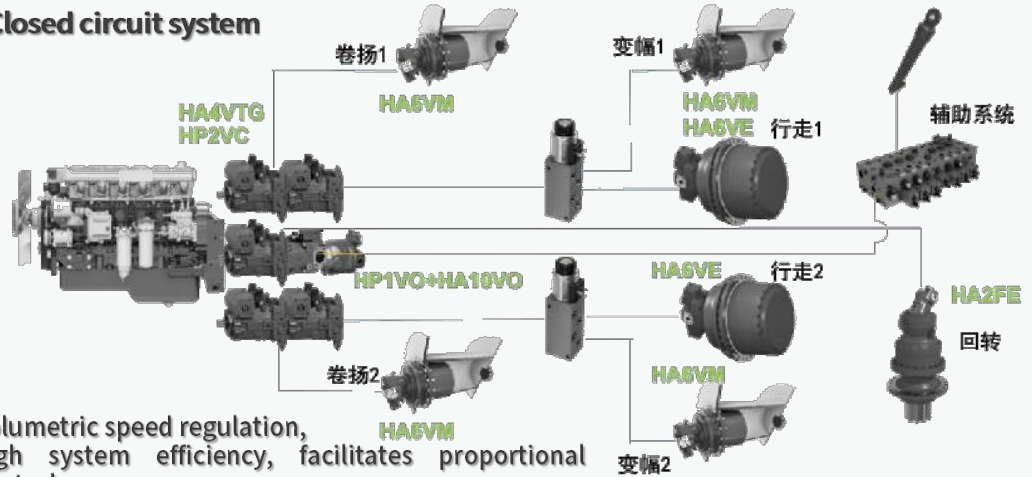

Volumetric speed regulation, high system efficiency, facilitates proportional control
Independent drive for compound and synchronous actions, superior control performance

Tandem pump-load sensing system

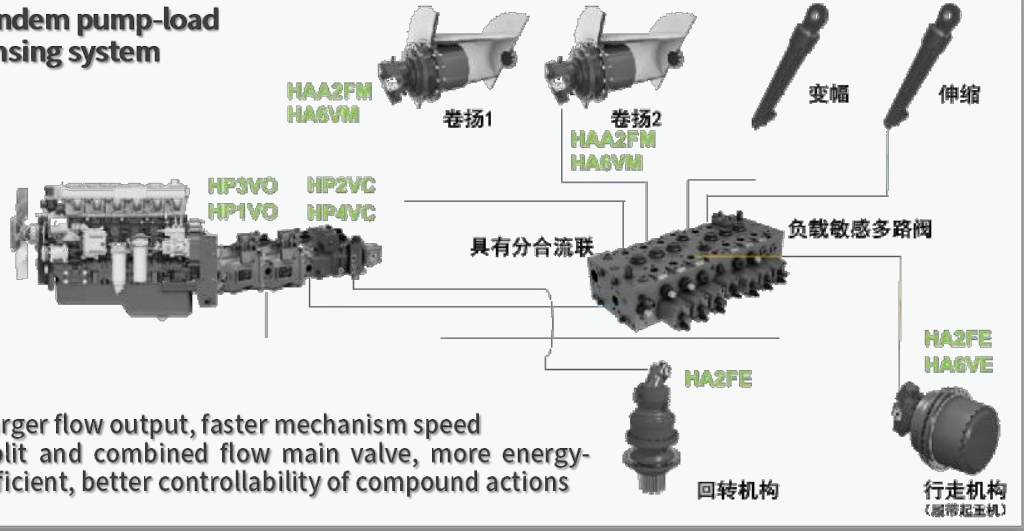

Larger flow output, faster mechanism speed
Split and combined flow main valve, more energy-efficient, better controllability of compound actions

Electric drive system with internal gear pumps

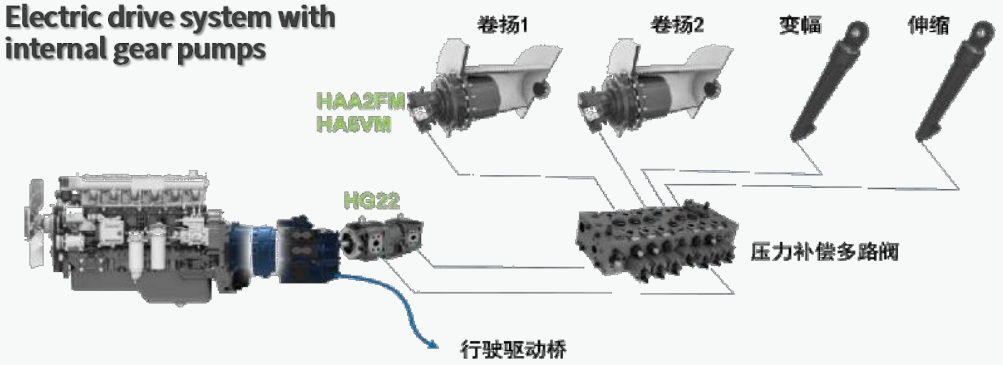

Compatible with electric drive systems for "quiet" operation, noise reduced to 70dB 200rpm standby, lower loss, improved fine motion performance
Diverse program control for matching electric motor and pump, higher efficiency, and better flexibility

Mobile Crane

High pressure and high efficiency, safe and compact

Compact structure, high power density, higher efficiency
Stable output torque, accurate operation, safe and efficient
Lower pressure fluctuations, lower noise
High pressure levels, higher running speed



Crawler Crane

Large torque, high accuracy, stable and reliable

Integrated large displacement design, more efficient and compact structure
Application adjustment for heavy-duty equipment, adapts to high-speed shock, safe and reliable
Series of technical solutions fully verified to ensure operational efficiency
Optimized component design to meet large torque output conditions

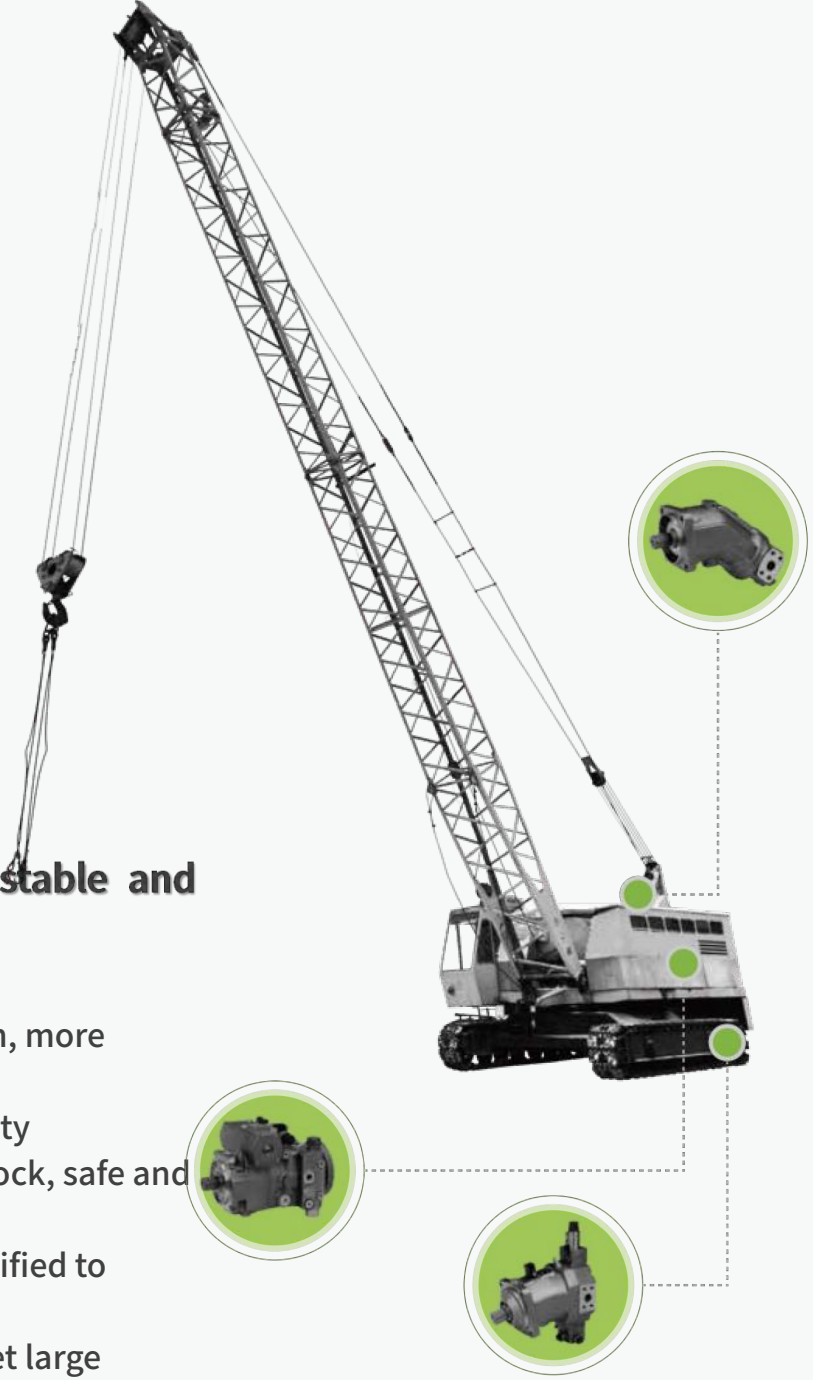

Boom Lift

Stable, efficient operation

Powerful driving force and flexible control, higher volumetric efficiency meets micro-operation requirements

High power density、high pressure and high torque,strong gradeability, good off-road performance

Precise start-stop control, stable at low speed, achieving a maximum stable walking speed of 0.8km/h

Higher efficiency and further saves energy load-sensitive system

Current direct drive/electro-hydraulic pilot meets various performance requirements and

easily handles various harsh environments

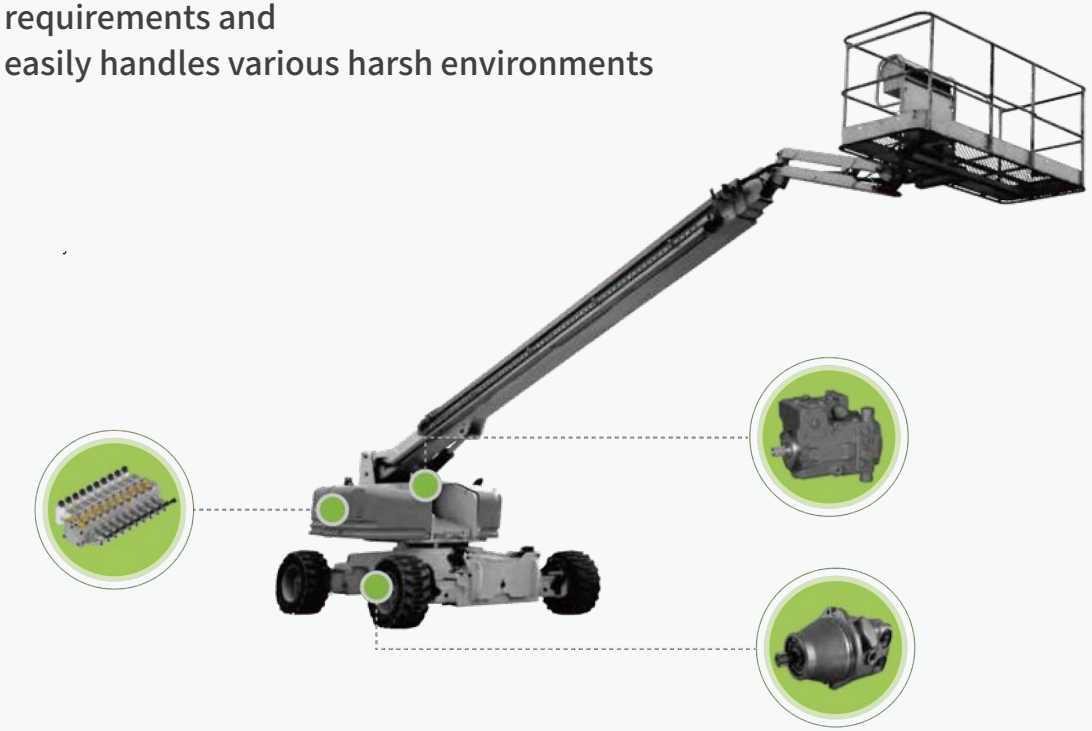



Forklift

Provide power sources or auxiliary power more efficiently

Specialize internal structure design improves system efficiency, low noise, and integrates perfectly with electric drive

The pressure level is almost the same as that of the piston pump, and dynamic load response improves steering sensitivity

Compensation structure supports continuous efficient operation, strong impact resistance, longer service life, meeting stringent operating conditions

Compact structure, small size, making installation more convenient in compact layout spaces



Hytek always focuses on to the development of the agricultural machinery market, and formulating more cost-effective product strategies and solutions according to customer needs and market changes.
Hytek is dedicated to enhancing the reliability and accuracy of agricultural machinery, so that "grain growers" can work more efficiently and comfortably.

AGRICULTURAL MACHINERY

Wheat/Corn Harvester

A hassle-free driving experience through accurate displacement control
High efficiency hydraulic components, fast walking, efficient harvesting
Multiple displacement specifications and control options
High power density and high torque, easy to walk on different terrains





Crawler Agricultural Machinery

Outstanding operating performance:High maneuverability, capable of flexible pivot steering/one-lever operation
Diversified configuration: Multiple control hydraulic components options available
System solution: Piston pump and piston motor combined together,offering more compatibale with function and performance

Rice Harvester

Separate Propel Solution

Adapt to the layout of the drive axle
Multiple displacement specifications and control options
High pressure and high efficiency
Smaller turning radius, more comfortable and flexible handling

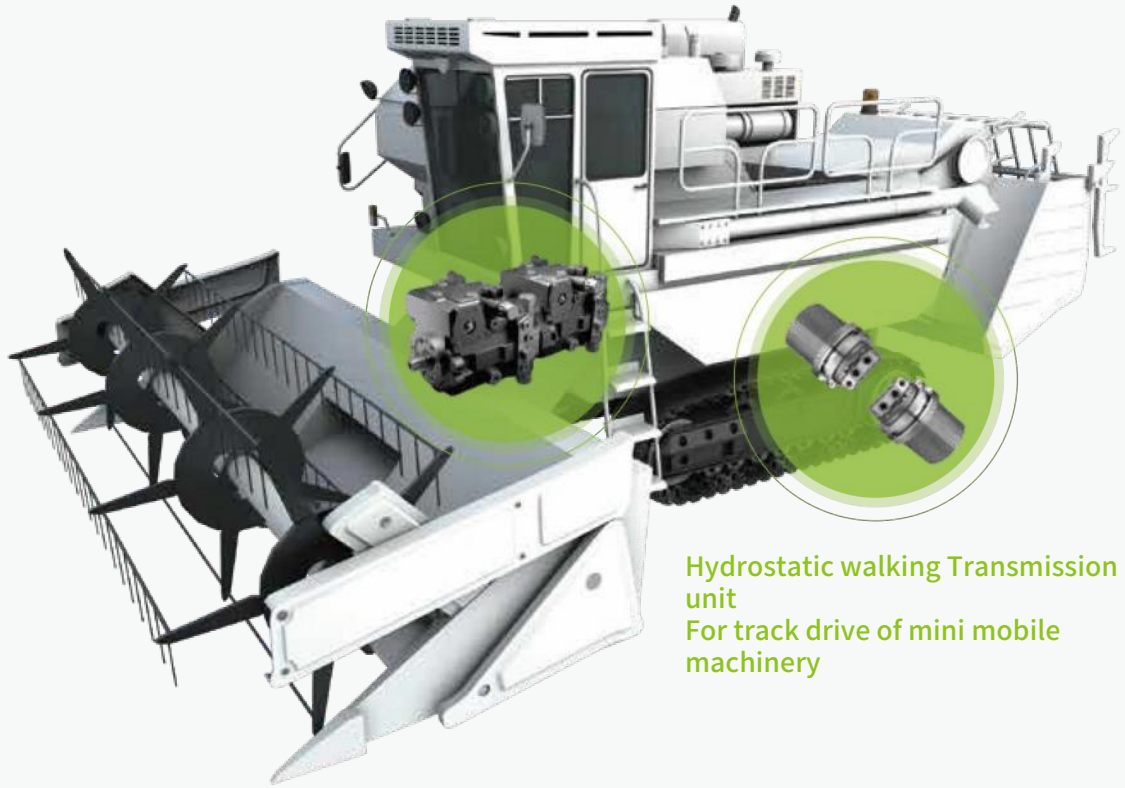

Hydrostatic walking Transmission unit
For track drive of mini mobile machinery



Integrated Propel Solution

Efficient and energy-saving:efficiency enhancement 5-10%;Low heat generation, higher reliability
Strong power: power enhancement 10%,speed enhancement 5-10%
Comfortable handling: noise reduction 8%, hydraulic control assistance, comfortable driving
Accurate control: micro motion performance enhancement 10%, more precise control

Sugarcane Harvester

Walking System and Combine header System of the closed circuit,runs efficient and stable
Electric proportional constant pressure control,more suitable to working conditions
Closed circuit improves heat dissipation efficiency,periodically reverse cleaning dirt
Proportional control of the entire system, comfortable operating,easy to upgrade intelligently

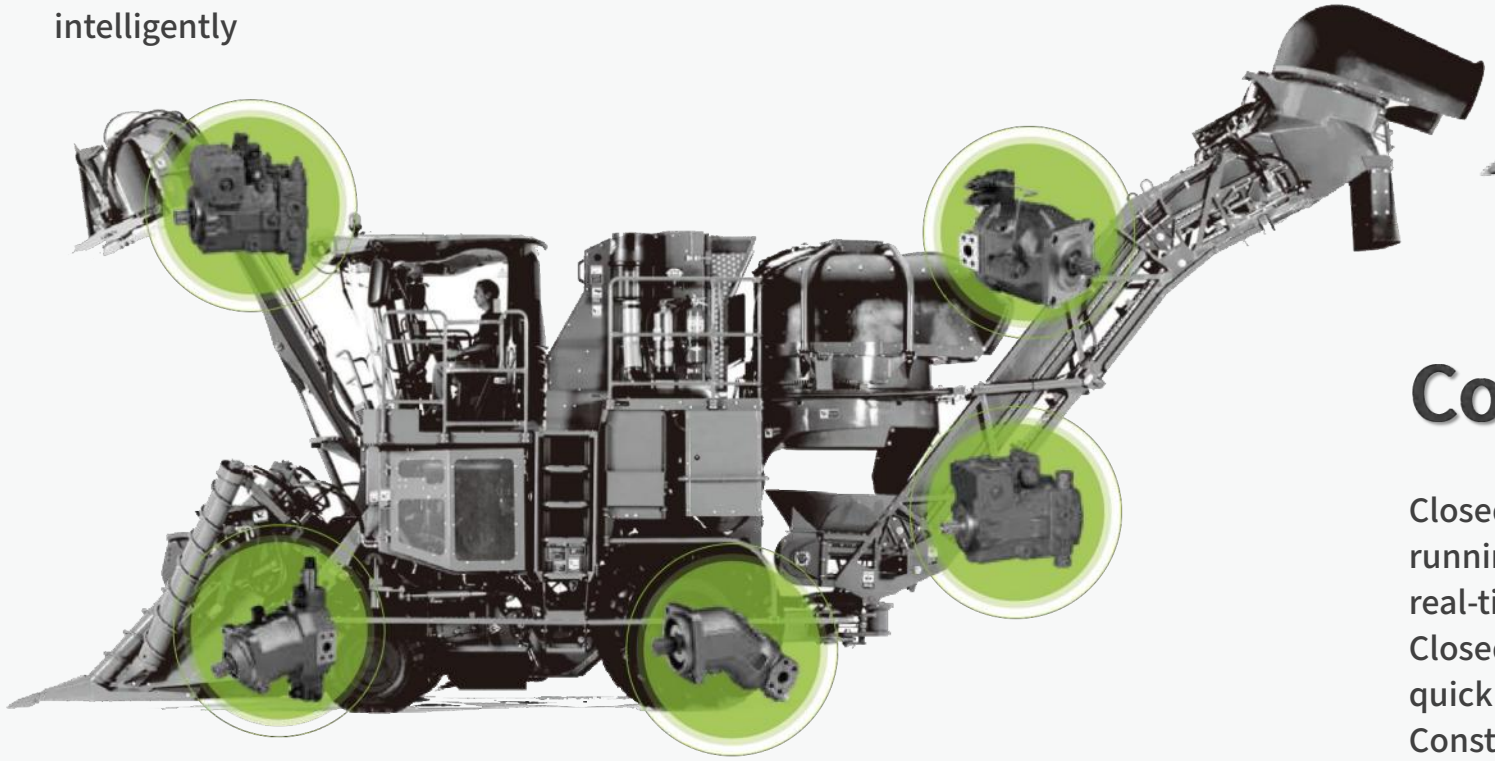



Cotton Picker

Closed circuit electric proportional walking system,high efficient running,quick response of rotation speed adjustment, real-time matching with the walking speed
Closed circuit electric proportional picking system，precise control & quick response
Constant pressure working system，reliable performance
Low temperature sealing and high-pressure shaft sealing effectively ensure picking under low-temperature conditions

Transplanter

Compact structure, easy installation
Efficient and energy-saving, reducing fuel consumption
Hydraulic continuously variable,higher speed, quick response
High pressure components,low failure rate and long service life





Tractor

High power density and high torque,precise control,making the tractor more stable for walking and more comfortable for operating
Low flow & small pressure pulsation, higher efficiency, and lower noise
Multiple displacement specifications and control options

INDUSTRIAL MACHINERY

For working conditions with low pressure, large flow and long pressure holding time, Hytek internal gear pumps is better in energy saving, emission reduction and noise reduction.
The hydraulic drive scheme of variable speed control gradually replaces the hydraulic drive scheme of constant speed control.

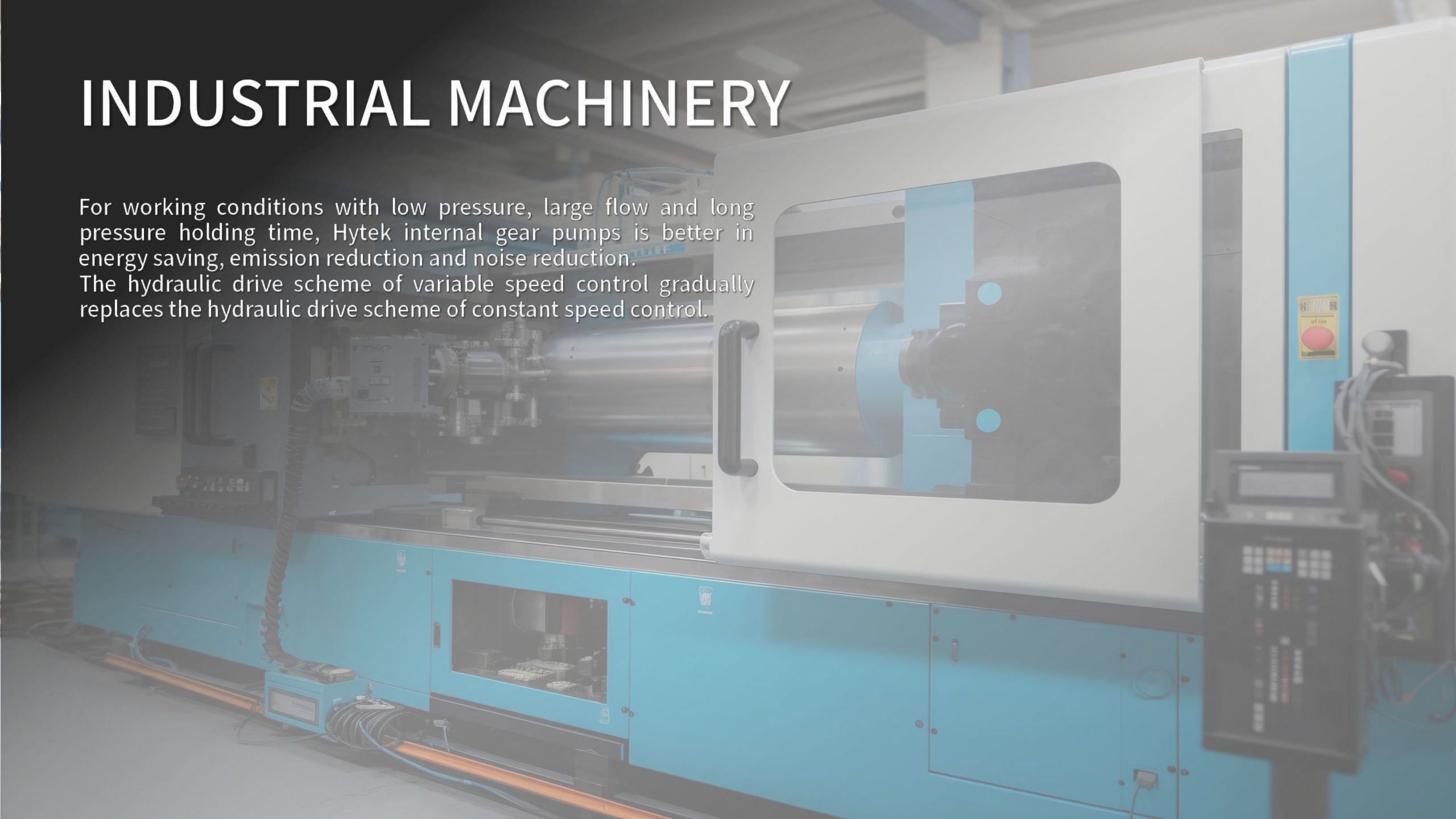

Injection Machine

High Response
Precise Control
High Efficiency

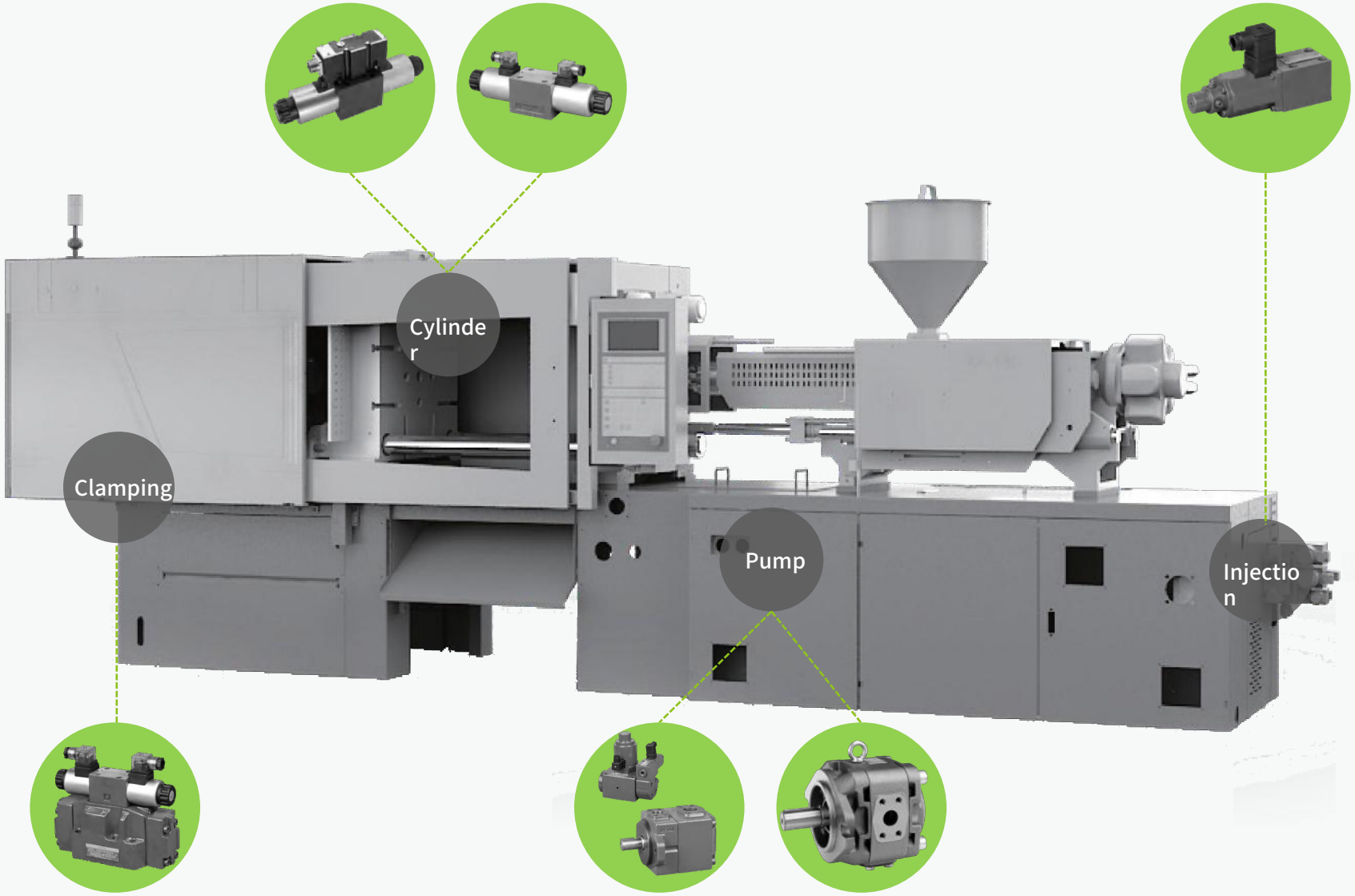

Injection Machine

±1bar	20ms	70dB	70%	94%
Pressure Control Accuracy	Response Time	Noise ⩽	Servo Drive Energy Efficiency	Volumetric Efficiency

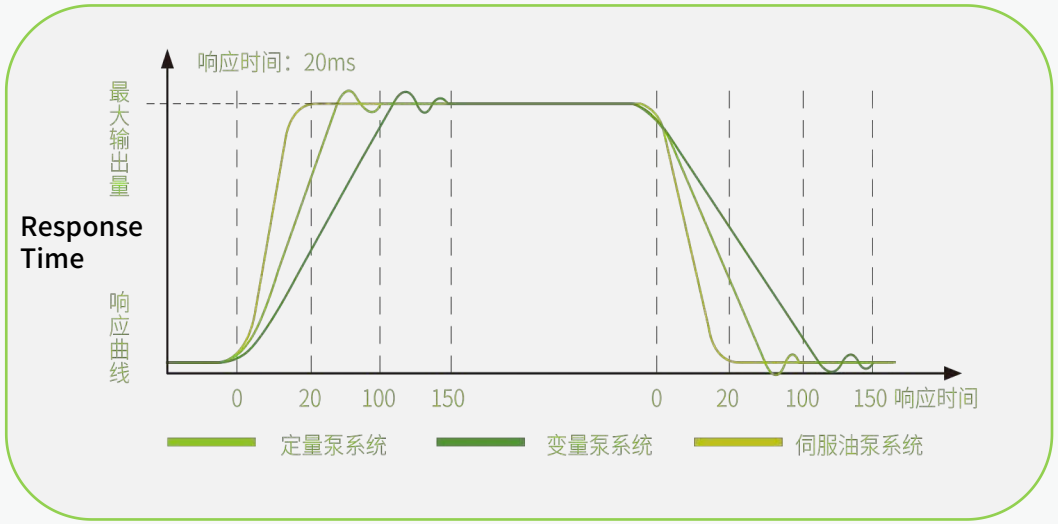

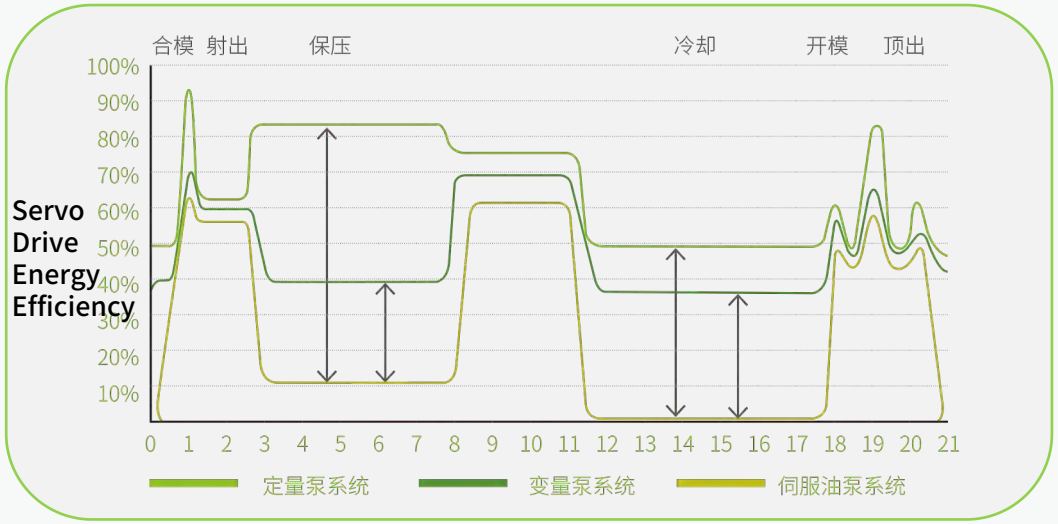

Internal Gear Pump

Highlight the high energy efficiency of variable frequency drivesy stems

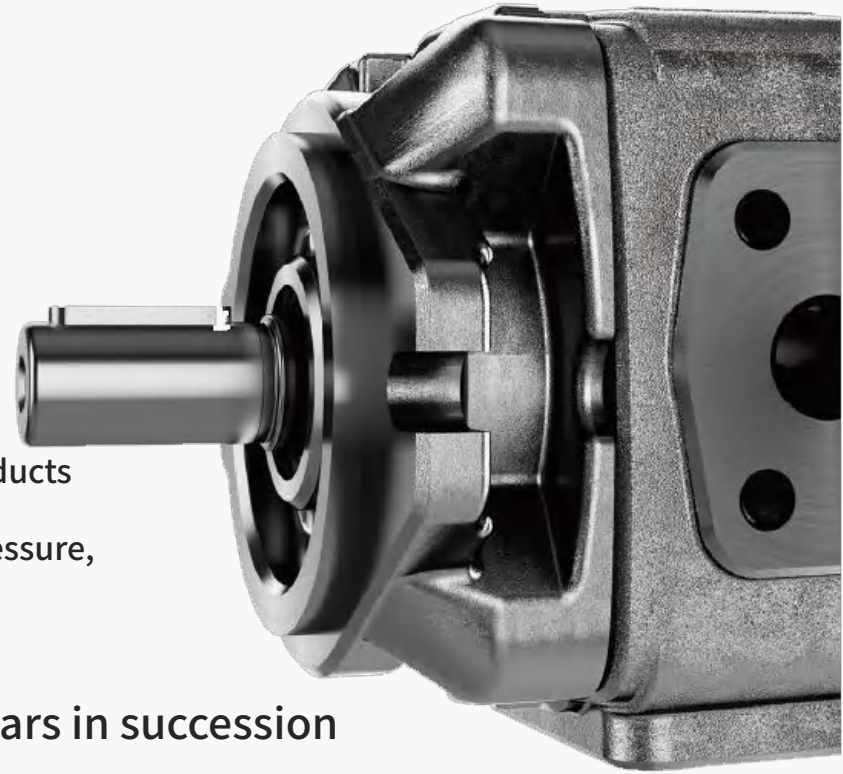

Over 10 years of experience in R&D

It is designed and developed to meet high pressure and high speed requirements of servo VFDs

The internal oil passages are further optimized based on suction and discharge flow analysis in high-speed high-pressure working conditions

The dynamic stability of the pressure compensation mechanism is improved to enhance reliability of the products

Good energy saving, emission reduction and noise reduction performance in working conditions with low pressure, high flow and long holding time

No. 1 in china internal gear pump market for injection molding machines for 3 years in succession

Displacement：**8~180 ml/r**

Max.pressure：**350 Bar**

Max.speed：**3000 r/min**



HG0



HG1



HG2



HG00



HG10



HG11



HG21



HG22

NEW GENERATION GEAR PUMP

- Newly Upgraded, Verified by Installation on Leading Global Clients
- Structural Upgrade, Fully Validated
- Material Upgrade, Enhanced Durability
- Process Upgrade, Improved Stability
- Testing Upgrade, Greater Reliability

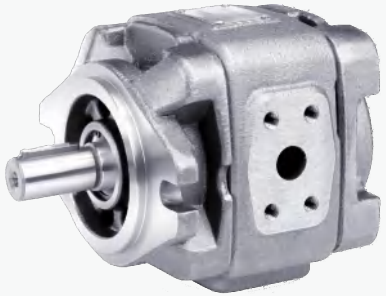

HGX

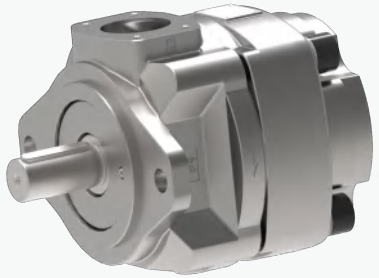

HQS

Meets Various Operating Conditions

- High Speed and High Pressure
- Low Speed Pressure Maintenance
- Frequent Start-Stop
- Lower Noise

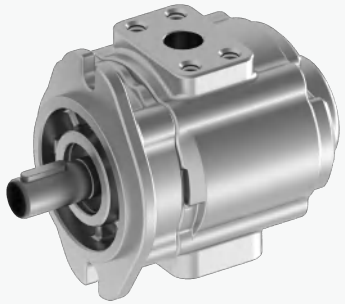

HNCB

HYTEK POWER Co.,Ltd.

No.99, Shengyuan Road, Tengqia, Lucheng District,
Wenzhou city 325029,China

T:+86-182 6156 0216
E:globalsales@hytek.cn
W:en.hytek.cn



@ HYTEK POWER

HYTEK

• © Hytek Power Co., Ltd. | All rights reserved. This documentation and/or parts thereof are protected by copyright and may not be reproduced or stored, processed, copied or distributed using electronic systems without the written permission of HYTEK. Violation of this provision will result in the obligation to pay damages.
All rights reserved in the event of patent or utility model registration.

Thanks for your watching!